**⚠ WARNING**

The information in this user manual is subject to change due to product updates or other reasons. This guide cannot replace the product labels or the safety precautions in the user manual unless otherwise specified. All descriptions in the manual are for guidance only.

## 01 Networking

### Single Inverter/Multiple Inverter Networking with Ezlink3000

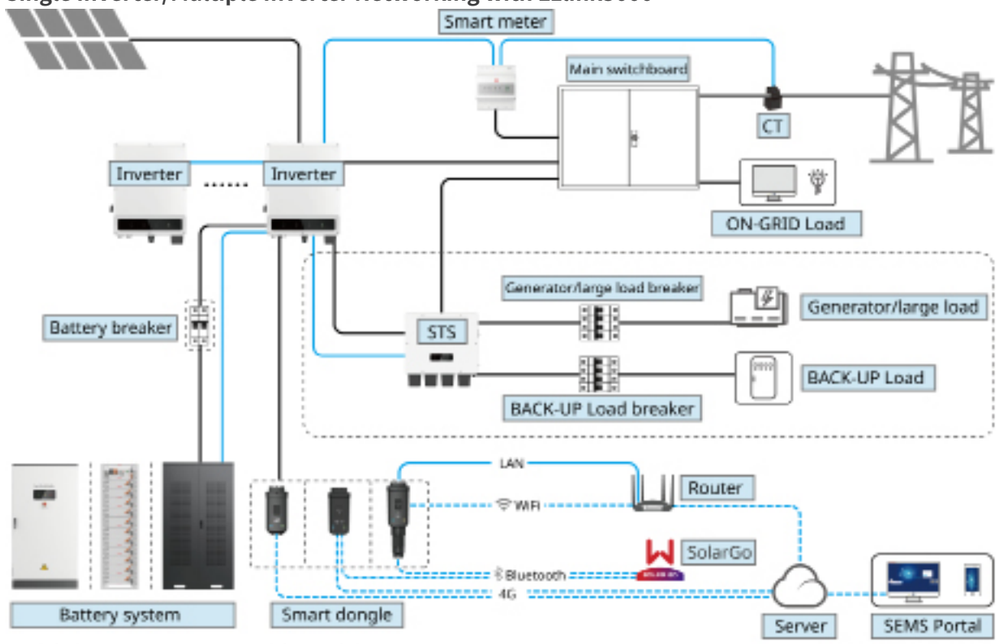


### Multiple Inverter Networking with SEC3000C

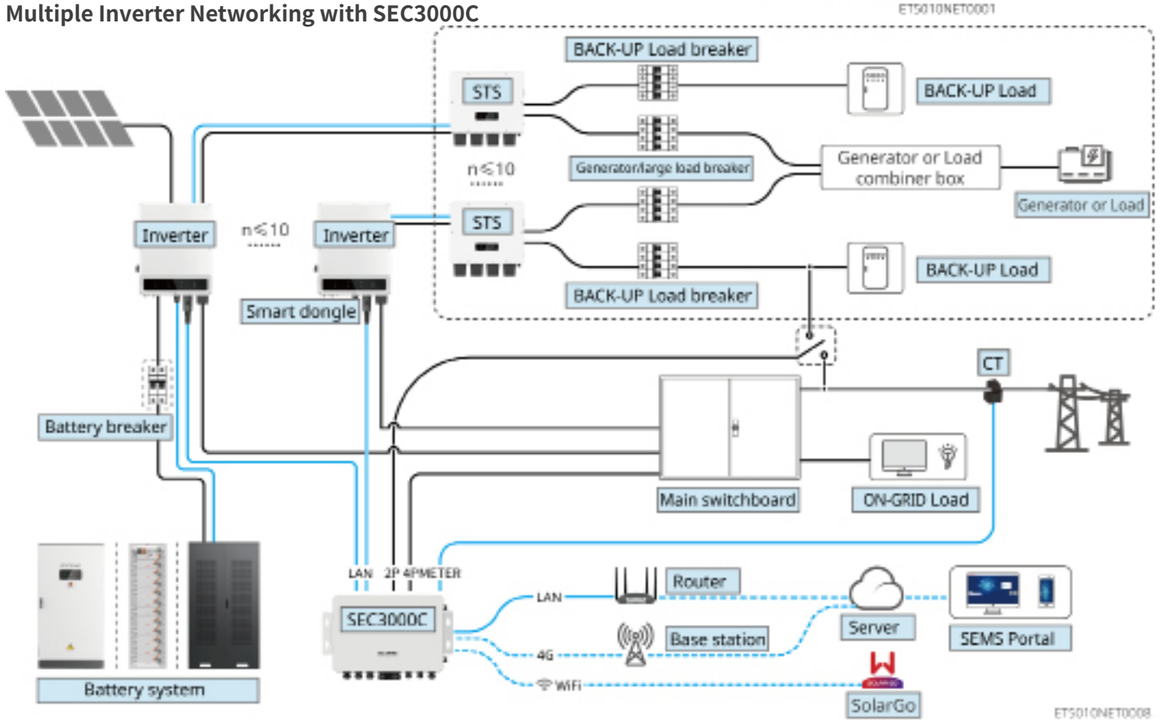


| Product Type | Model | Explanation |
|---|---|---|
| Inverter | GW25K-ET-10<br>GW30K-ET-10<br>GW40K-ET-10<br>GW50K-ET-10 | GW25K-ET-10 and GW30K-ET-10 only support forming a parallel system via Ezlink3000 and do not support SEC3000C parallel operation.<br>For multiple inverters paralleling system, the following version requirements must be met:<br>• All inverters in the paralleling system have consistent software versions<br>• Inverter software version requirements:<br>  • Inverter ARM software version is 11.475 or above<br>  • Inverter DSP software version is 4.400 or above |
| STS | STS200-80-10 | The off grid function can be used only with a static transfer switch.<br>The software version of static transfer switch is 4.400 or above.<br>No circuit breaker shall be installed between the inverter and the static transfer switch. |
| Battery system | LX C101-10<br>LX C120-10<br>LX C138-10<br>LX C156-10 | • A maximum of 3 battery systems can be clustered in a system.<br>• Battery systems of different models cannot be connected in parallel together. |
| | GW25.6-BAT-I-G10<br>GW30.7-BAT-I-G10<br>GW35.8-BAT-I-G10<br>GW40.9-BAT-I-G10<br>GW46.0-BAT-I-G10<br>GW51.2-BAT-I-G10<br>GW56.3-BAT-I-G10 | • A maximum of 6 battery systems can be clustered in a system.<br>• Battery systems of different models cannot be connected in parallel together. |
| | GW92.1-BAT-AC-G10<br>GW102.4-BAT-AC-G10<br>GW112.6-BAT-AC-G10 | • A maximum of 4 battery systems can be clustered in a system.<br>• Battery systems of different models cannot be connected in parallel together. |
| Smart energy controller | SEC3000C | For information on SEC3000C requirements, installation, wiring, etc., please refer to the SEC3000C User Manual. |
| Smart meter | • GM330 | For single inverter scenario or inverters paralleling scenario with Ezlink3000, a smart meter needs to be used.<br>The meter will be delivered with inverter.<br>The CT can be purchased from GoodWe or other suppliers. CT ratio: nA/5A.<br>• nA: CT primary input current, n ranges from 200 to 5000.<br>• 5A: CT Secondary input current. |
| Smart dongle | • 4G Kit-CN（Only China）<br>• 4G Kit-CN-G21（Only China）<br>• WiFi/LAN Kit-20<br>• Ezlink3000 | • When operating as a standalone unit, use the WiFi/LAN Kit-20, 4G Kit-CN, or 4G Kit-CN-G21.<br>• When configuring a parallel system with the SEC3000C inverter, each inverter must be paired with a WiFi/LAN Kit-20 for network wiring.<br>• When operating in parallel, only the master inverter needs to be connected to the Ezlink3000; the slave inverters do not need to be connected to the smart dongle. The Ezlink3000 firmware version must be 1.5.4 or higher.<br>• When using the Ezlink3000 for parallel operation, up to four inverters can be configured into a parallel system. |

## 02 Power On/Off

### Single inverter, without BACK-UP function

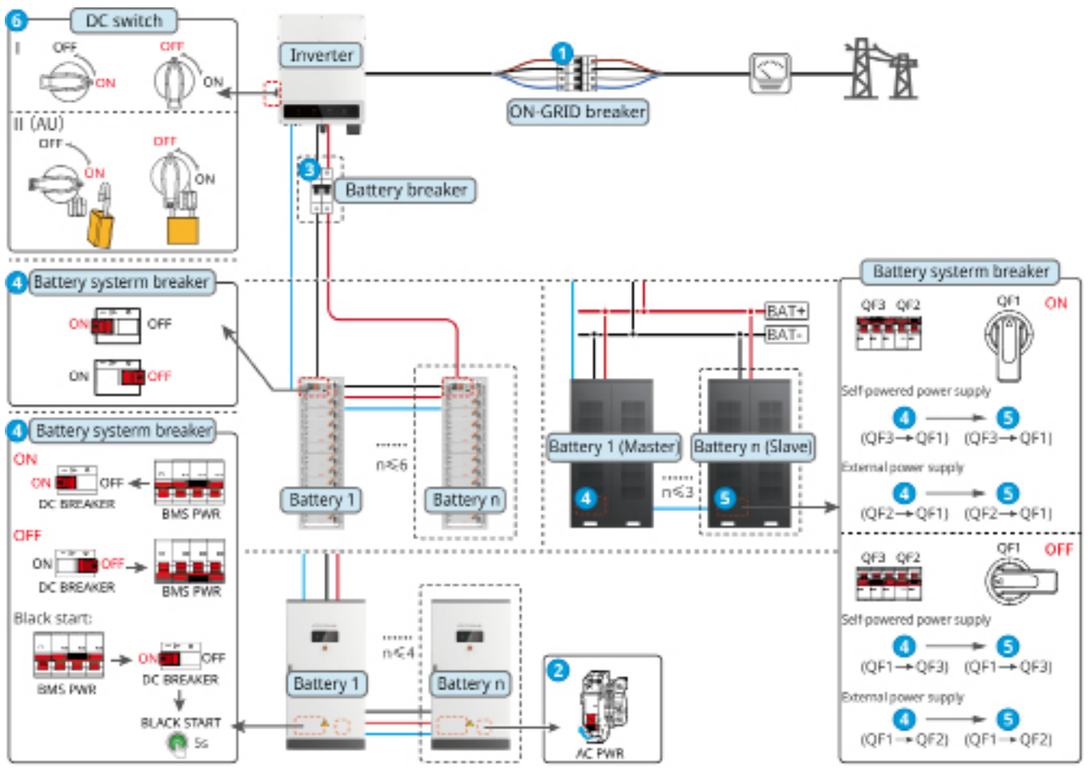


ET5010PWR0001

**Power ON/OFF:**

1→2→3→4→5→6

3 Optional in compliance with local laws and regulations

### Single inverter, with BACK-UP function

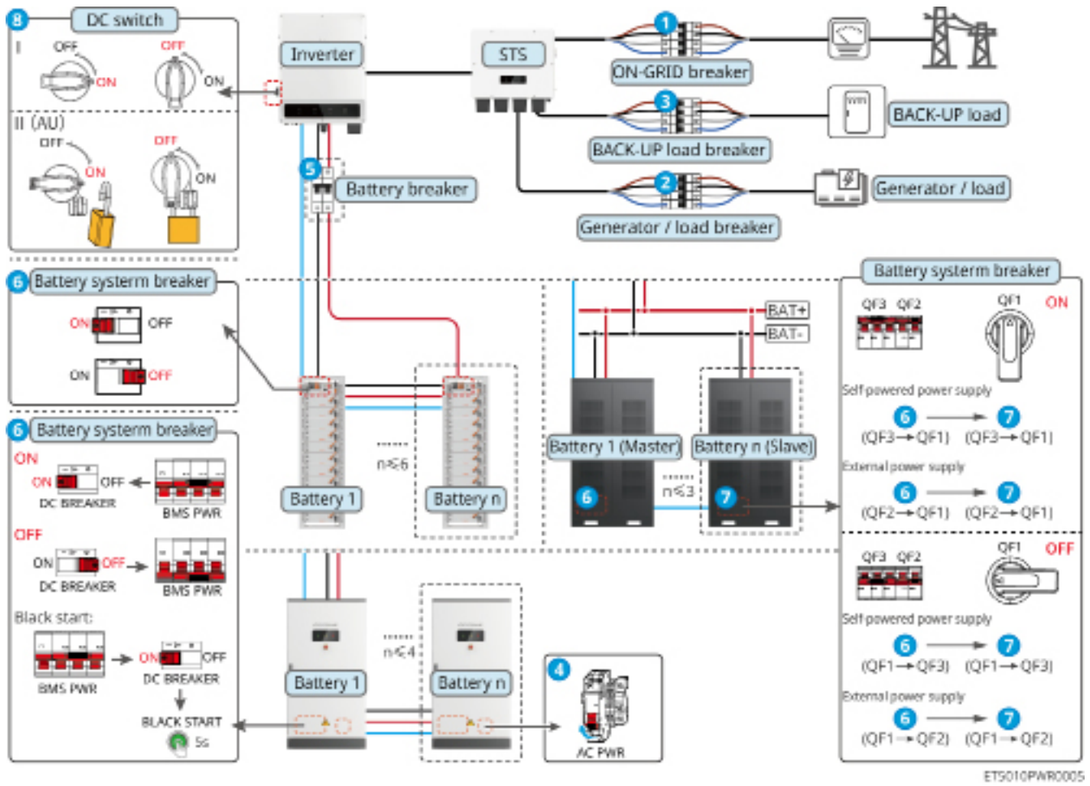


ET5010PWR0005

**Power ON/OFF:**

1→2→3→4→5→6→7→8

5 Optional in compliance with local laws and regulations

4 Optional in compliance with local laws and regulations

## Multiple inverters in parallel, without BACK-UP function: ET+Battery+GM330+Ezlink3000 (number of inverter in parallel ≤4)

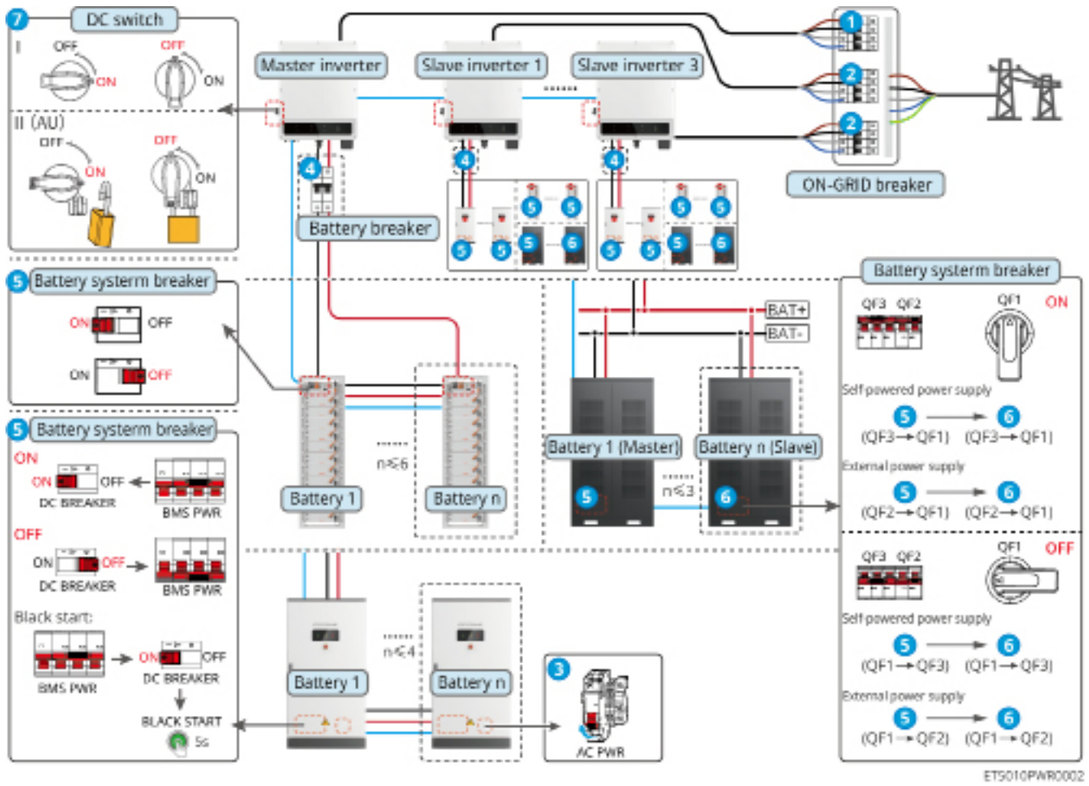


**Power ON/OFF:**

1→2→3→4→5→6→7

4 Optional in compliance with local laws and regulations

## Multiple inverters in parallel, without BACK-UP function: ET+Battery+SEC3000C+WiFi/LAN Kit-20 (number of inverter in parallel ≤10)

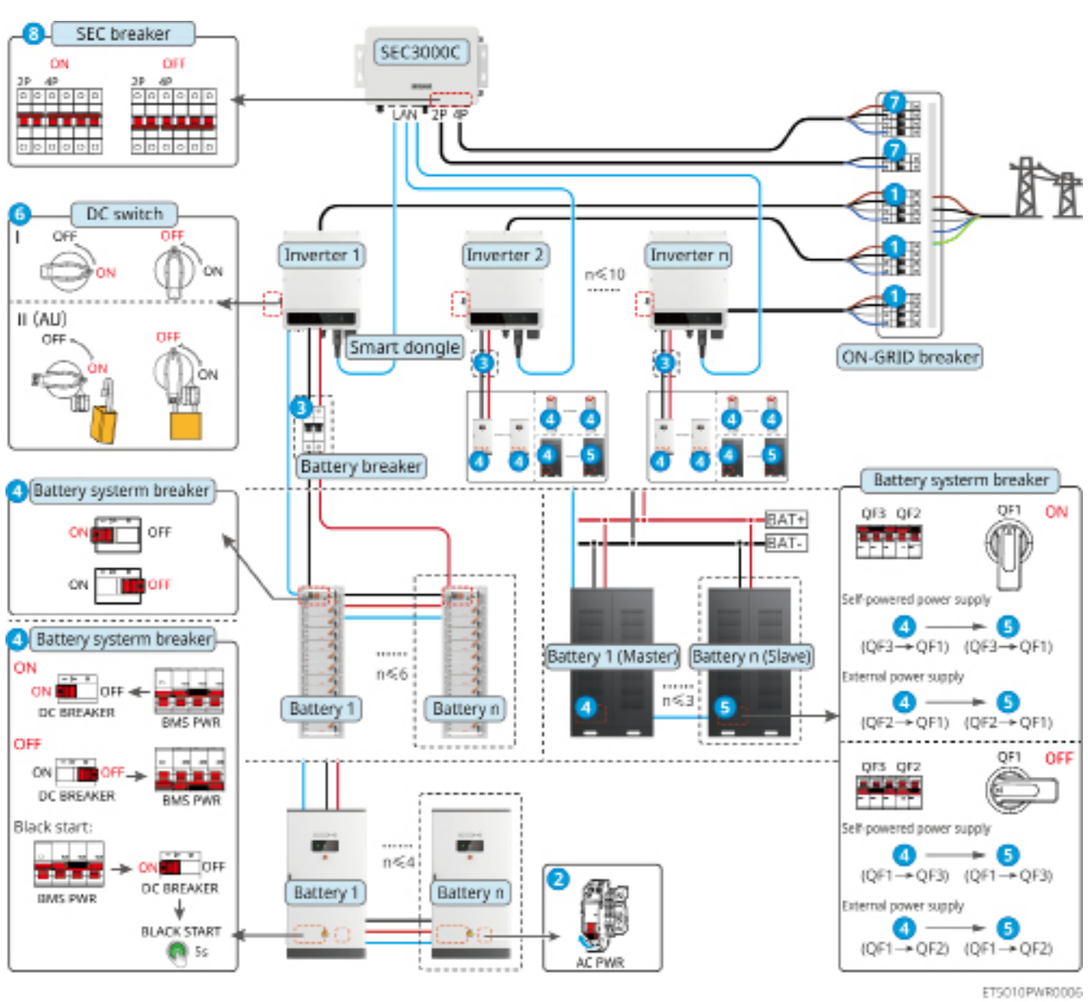


**Power ON/OFF:**

1→2→3→4→5→6→7→8

3 Optional in compliance with local laws and regulations

## Multiple inverters in parallel, without BACK-UP paralleing: ET+STS+Battery+GM330+ Ezlink3000 (number of inverter in parallel ≤4)

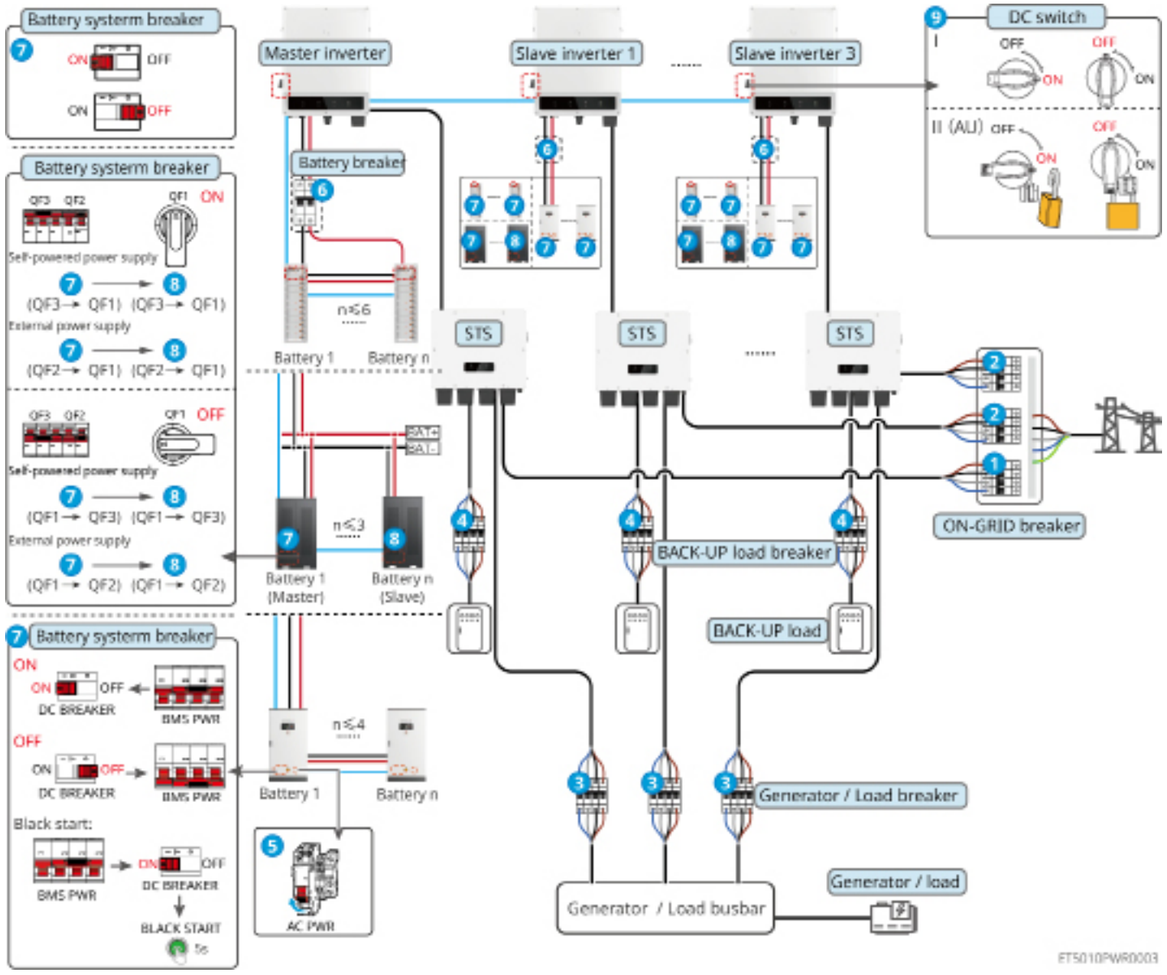


**Power ON/OFF:**

1→2→3→4→5→6→7→8→9

6 Optional in compliance with local laws and regulations

## Multiple inverters in parallel, without BACK-UP paralleing: ET+STS+Battery+ SEC3000C+WiFi/LAN Kit-20 (number of inverter in parallel ≤10)

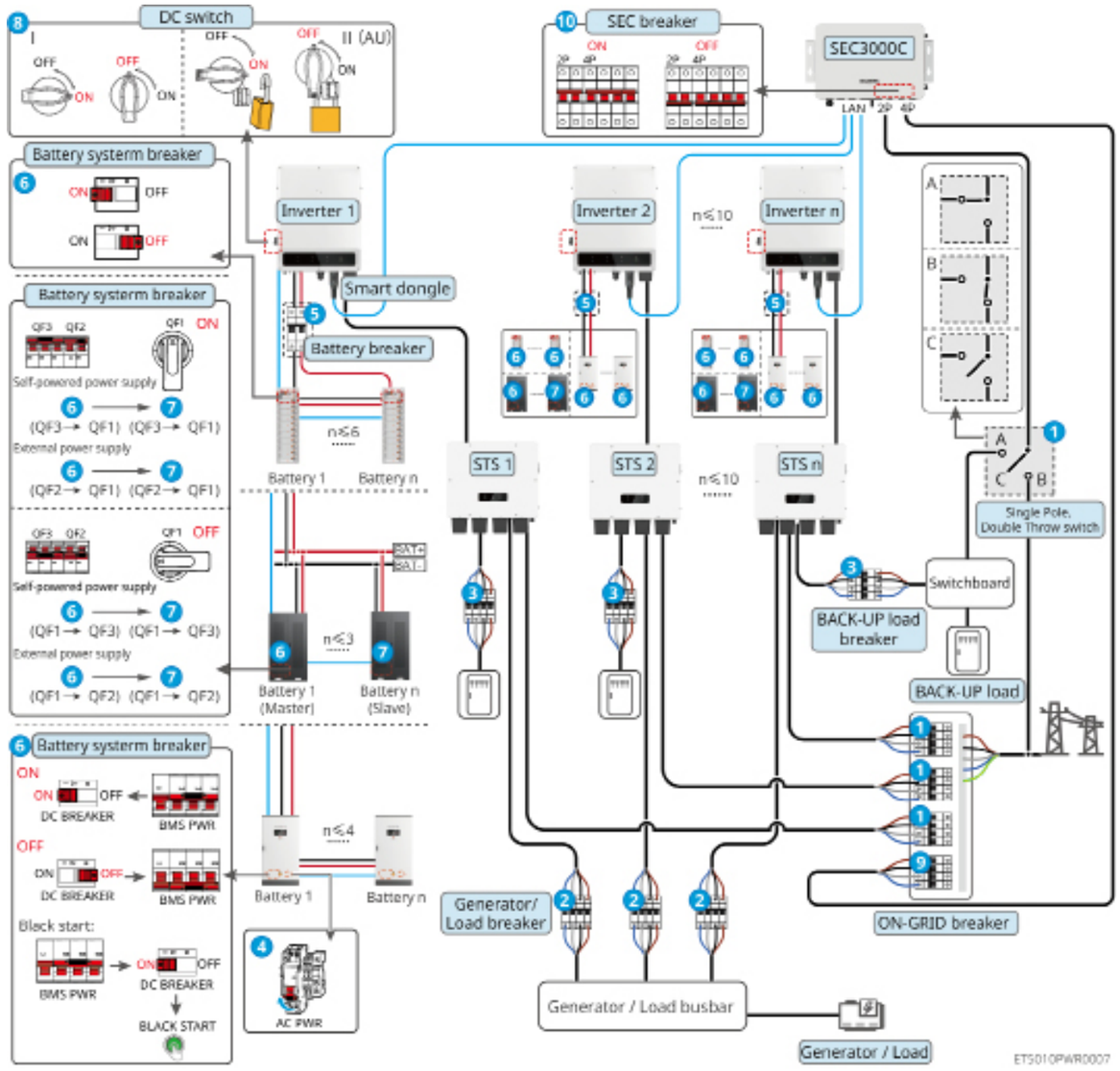


**Power ON/OFF:**

1→2→3→4→5→6→7→8→9→10

5 Optional in compliance with local laws and regulations

## Multiple inverters in parallel, with BACK-UP paralleing: ET+STS+Battery+GM330+ Ezlink3000 (number of inverter in parallel ≤4)

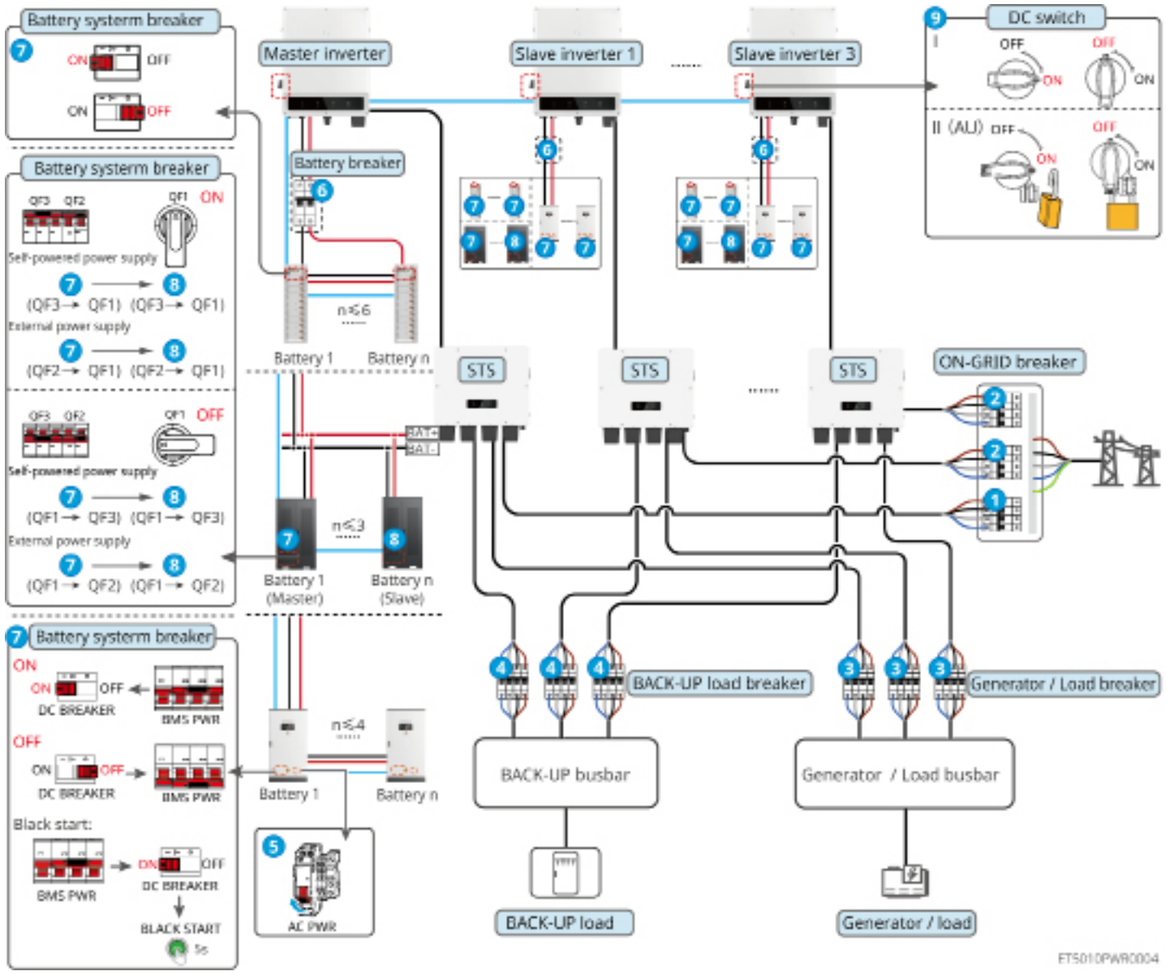


**Power ON/OFF:**

1→2→3→4→5→6→7→8→9

6 Optional in compliance with local laws and regulations

## Multiple inverters in parallel, with BACK-UP paralleing: ET+STS+Battery+ SEC-3000C+WiFi/LAN Kit-20 (number of inverter in parallel ≤10)

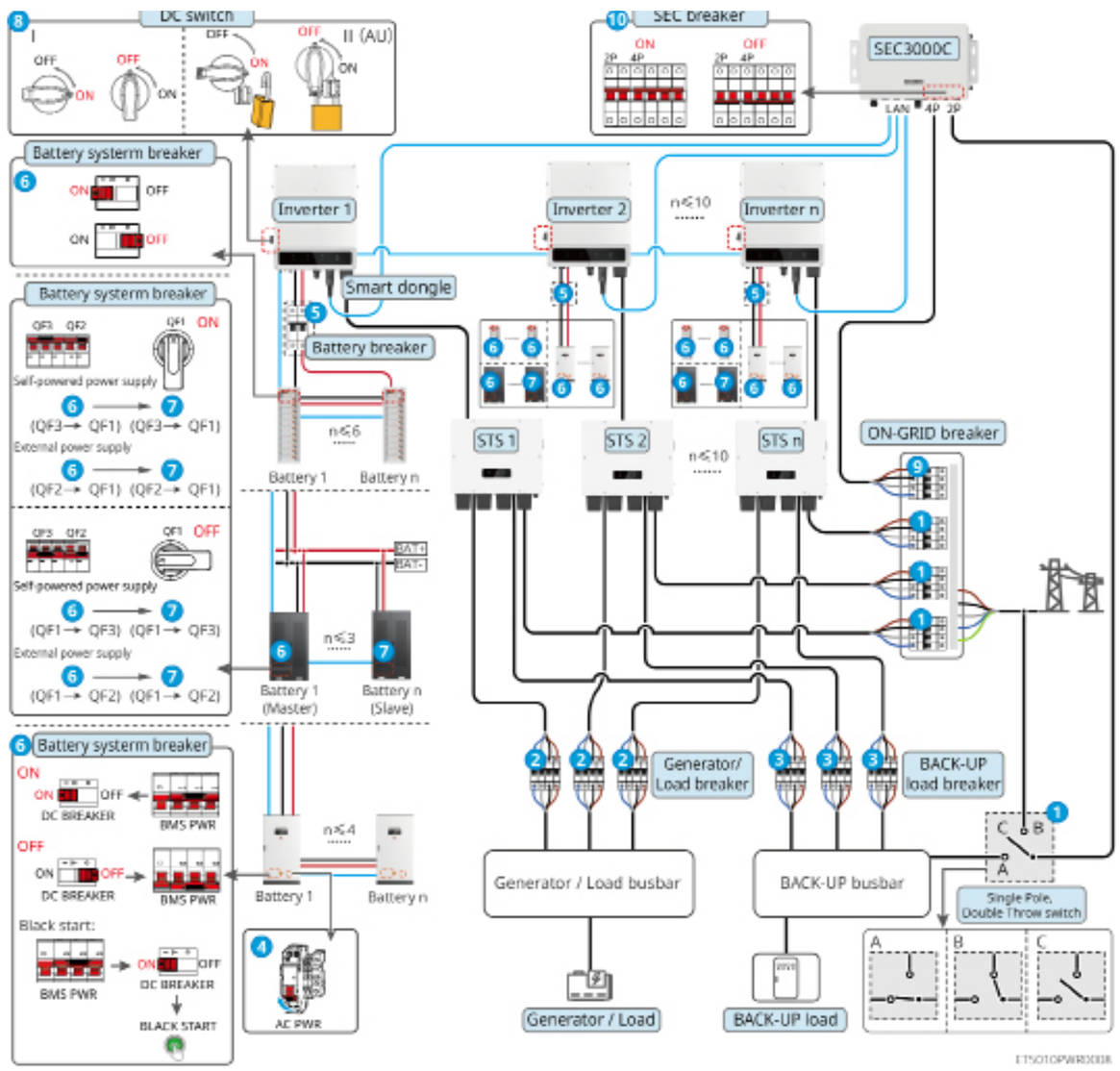


**Power ON/OFF:**

1→2→3→4→5→6→7→8→9→10

5 Optional in compliance with local laws and regulations

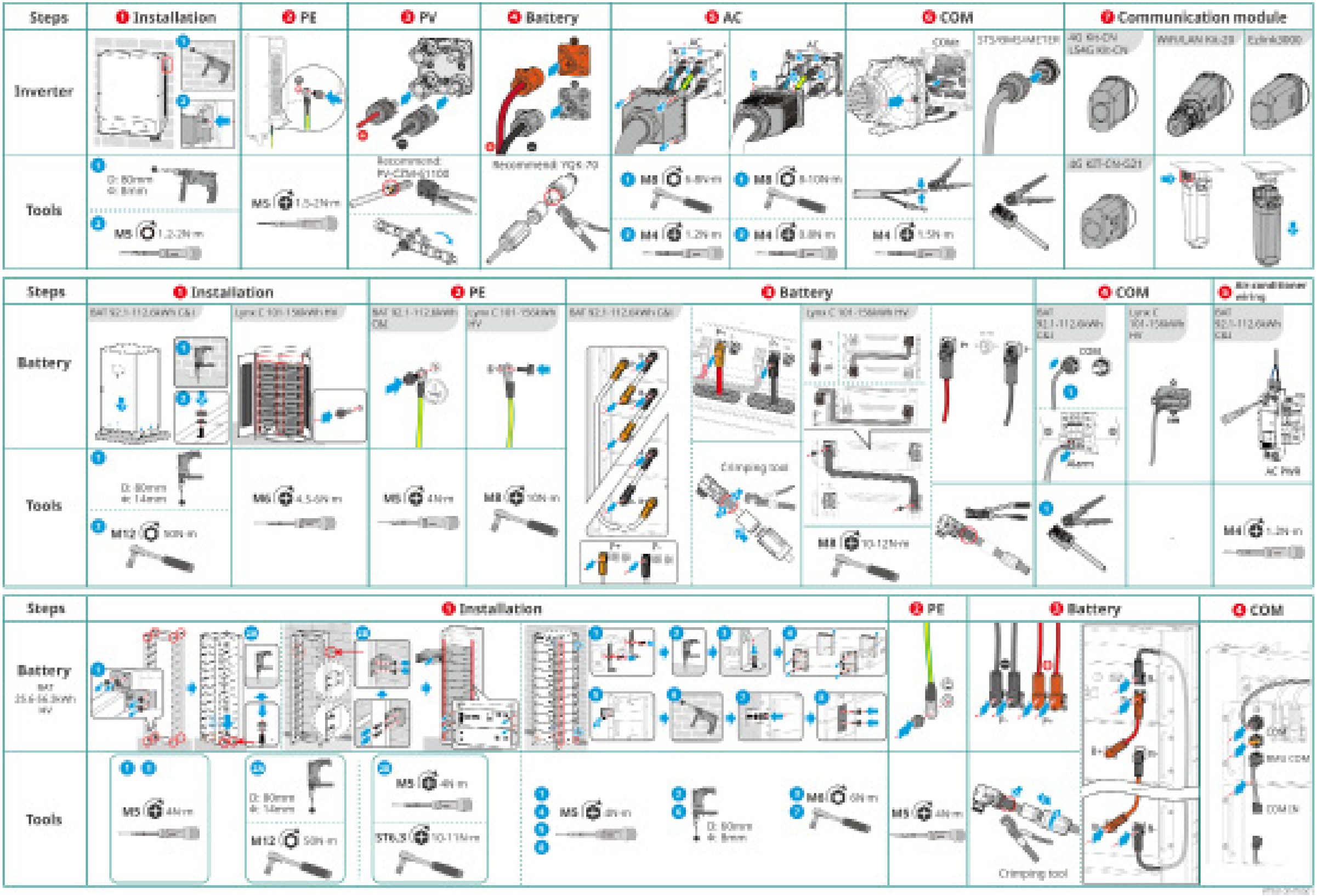
Steps
1 Installation
2 PE
3 PV
4 Battery
5 AC
6 COM
7 Communication module
Inverter
Tools
Steps
1 Installation
3 PE
4 Battery
5 COM
6 Air conditioner wiring
Battery
Tools
Steps
1 Installation
2 PE
3 Battery
4 COM
Battery
Tools

| Steps | ❶ Installation | ❷ PE | ❸ AC | ❹ CT | ❺ COM | ❻ ETH | ❼ 4G | ❽ DO/DI/AI/PT |
|---|---|---|---|---|---|---|---|---|
| Controller SEC3000C | 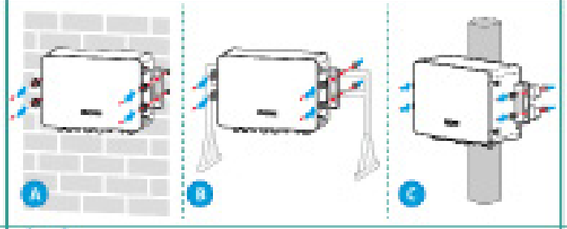 | | 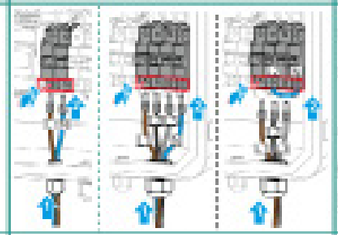 | 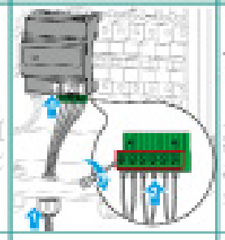 | 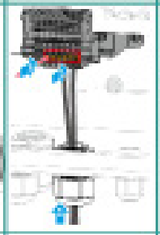 | 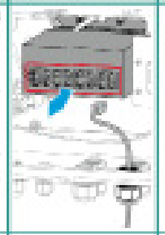 | 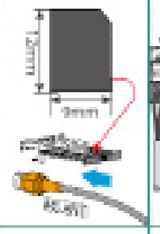 | 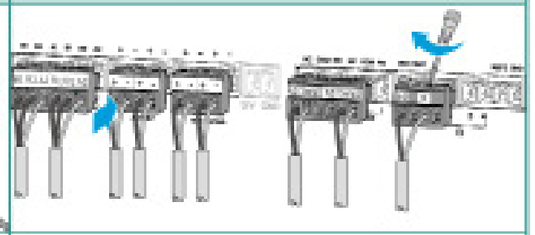 |
| Tools | A B D: 70mm Φ: 15mm<br>A M12 42N·m<br>B C M10 24N·m | M5 1.5-2N·m | ❸ M7 2-2.5N·m | 0.5N·m | | | | M2 0.5N·m |

| Steps | ❶ Installation | ❷ PE | ❸ AC | ❹ COM |
|---|---|---|---|---|
| STS | 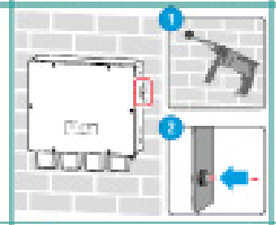 | 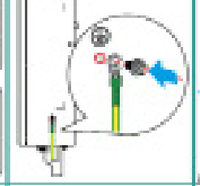 | 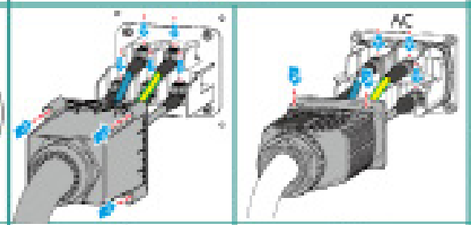 | |
| Tools | ❶ D: 80mm Φ: 8mm<br>❷ M5 1.2-2N·m | M5 1.5-2N·m | ❶ M8 6-8N·m<br>❷ M4 1.2N·m | ❶ M8 8-10N·m<br>❷ M4 0.8N·m |

| Steps | ❶ Installation | ❷ Cable Connections | ❸ Power | ❹ Commissioning |
|---|---|---|---|---|
| Smart meter GM330 | 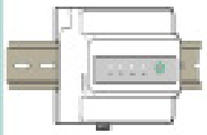 | 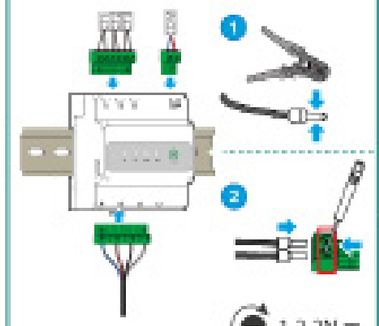 | AC breaker 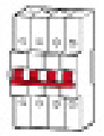 | SolarGo APP<br> SEMS Portal APP or SEMS Portal WEB |

## 04 Wiring Diagram

Single inverter, without BACK-UP function: Inverter + Battery + GM330

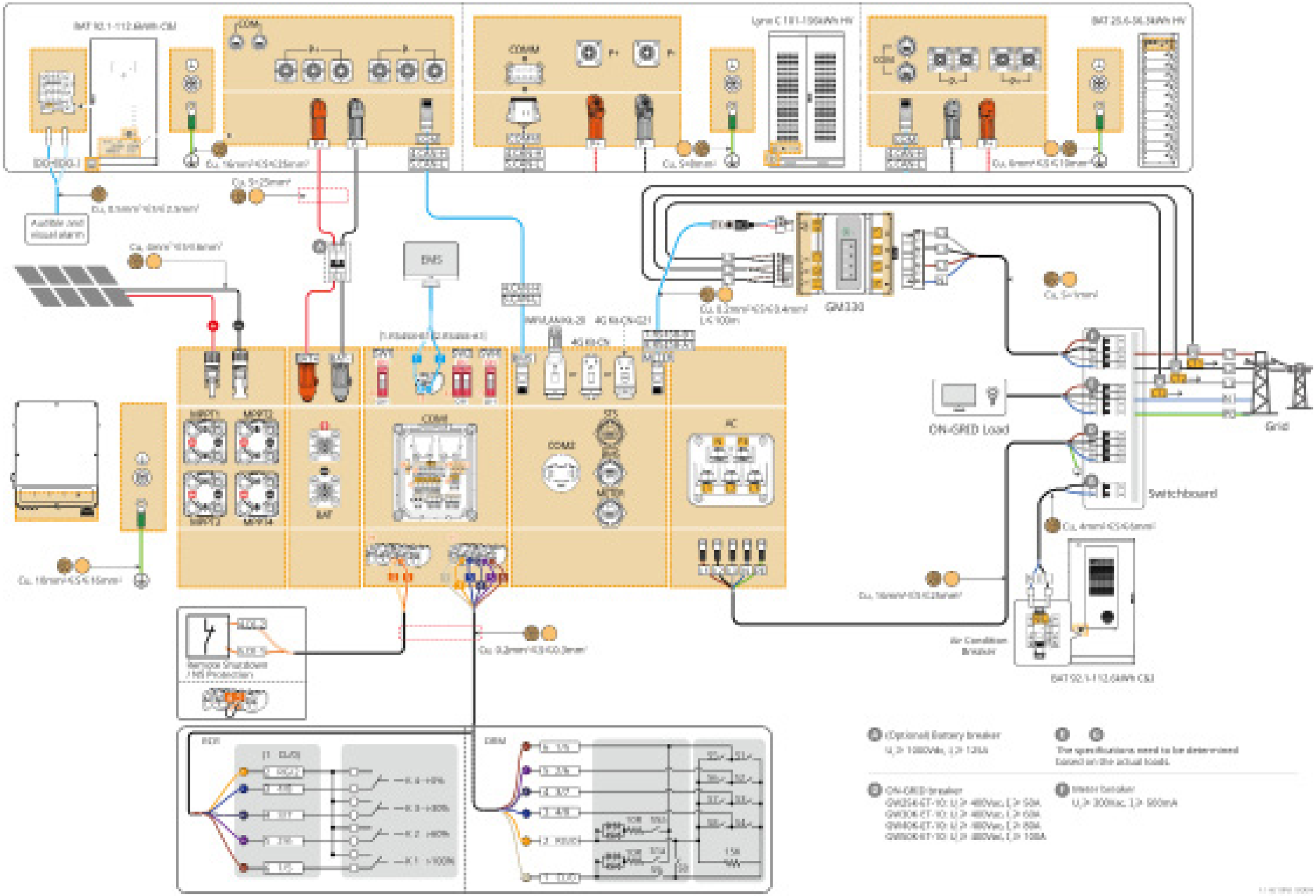

Single inverter, with BACK-UP function: Inverter + STS + Battery + GM330

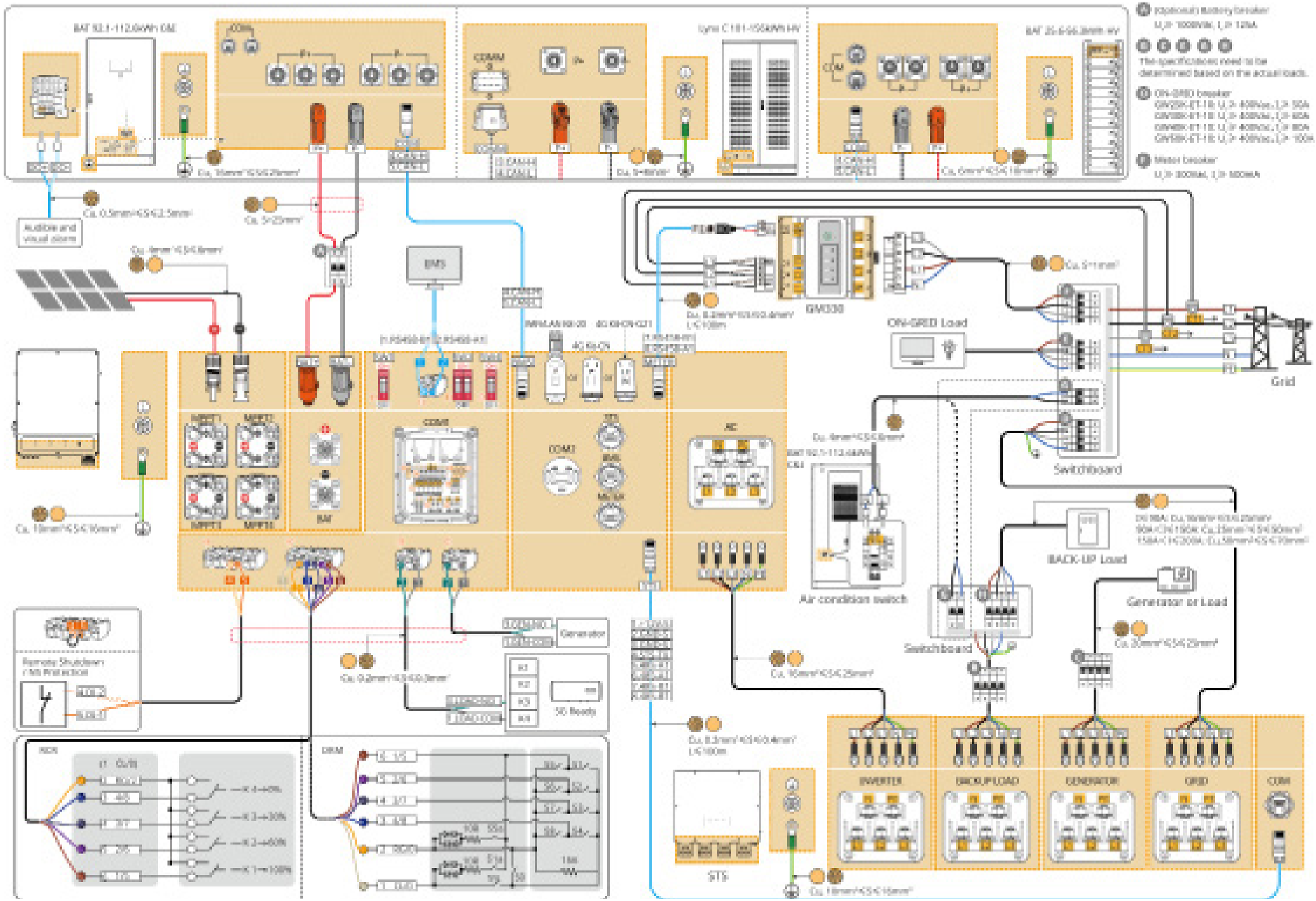

Multiple inverter in parallel, without BACK-UP function: Inverters + Battery + GM330 + Ezlink3000 (number of inverters in parallel≤4)

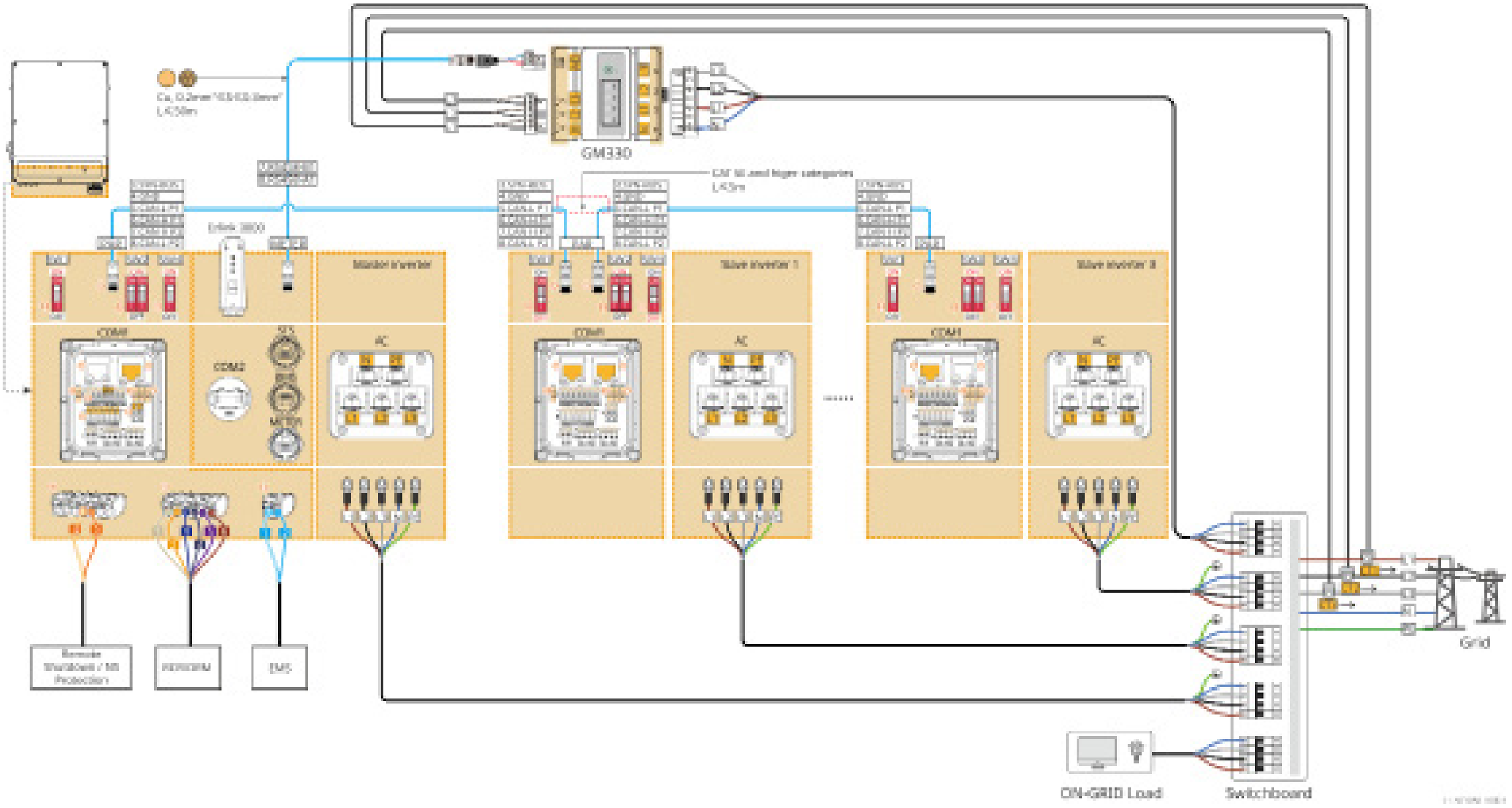

Multiple inverter in parallel, without BACK-UP function: Inverters + Battery + SEC3000C + WiFi/LAN Kit-20 (number of inverters in parallel≤10)

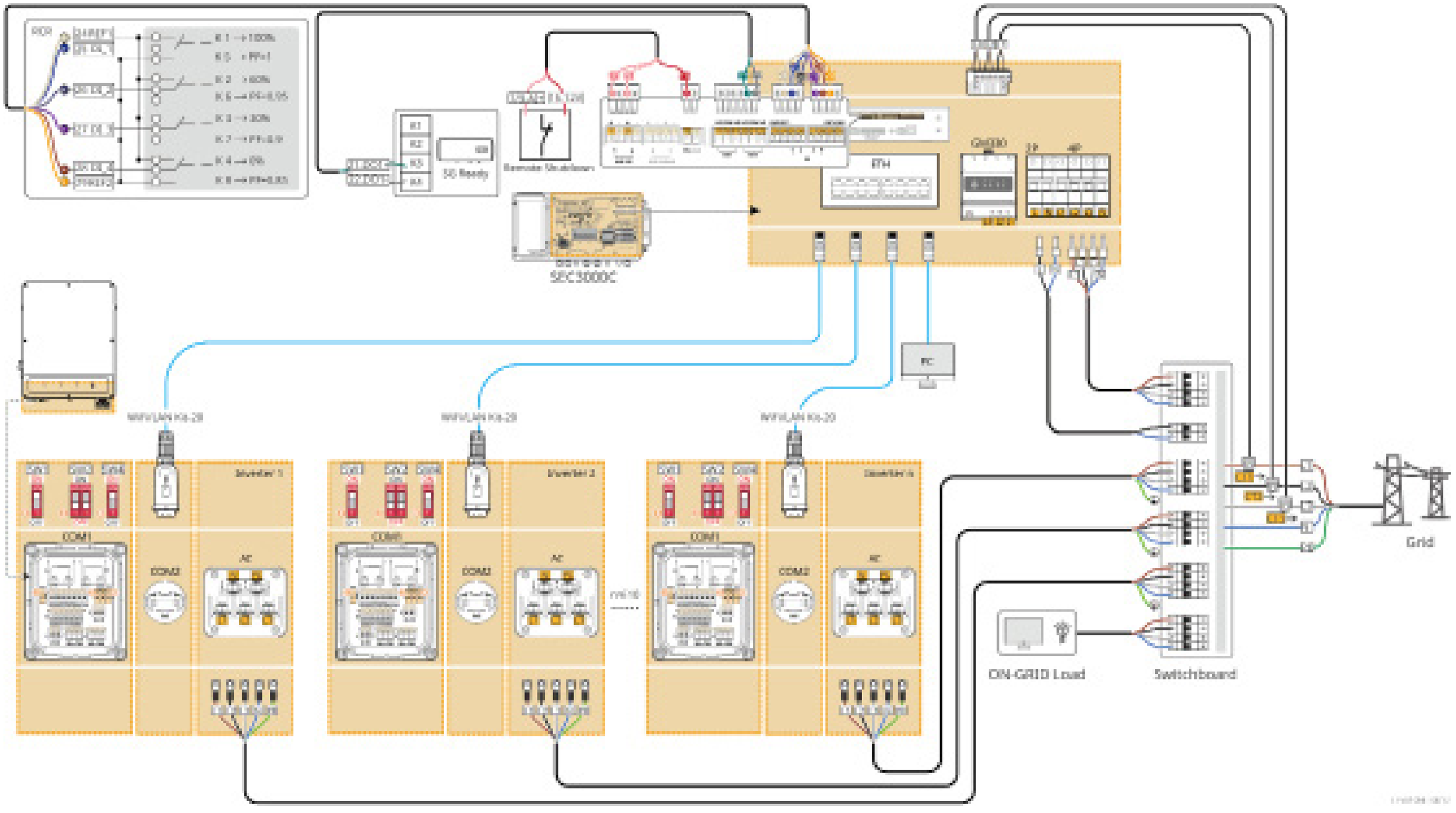

Multiple inverter in parallel, without BACK-UP paralleling: Inverters + STS + Battery + GM330 + Ezlink3000 (number of inverters ≤ 4)

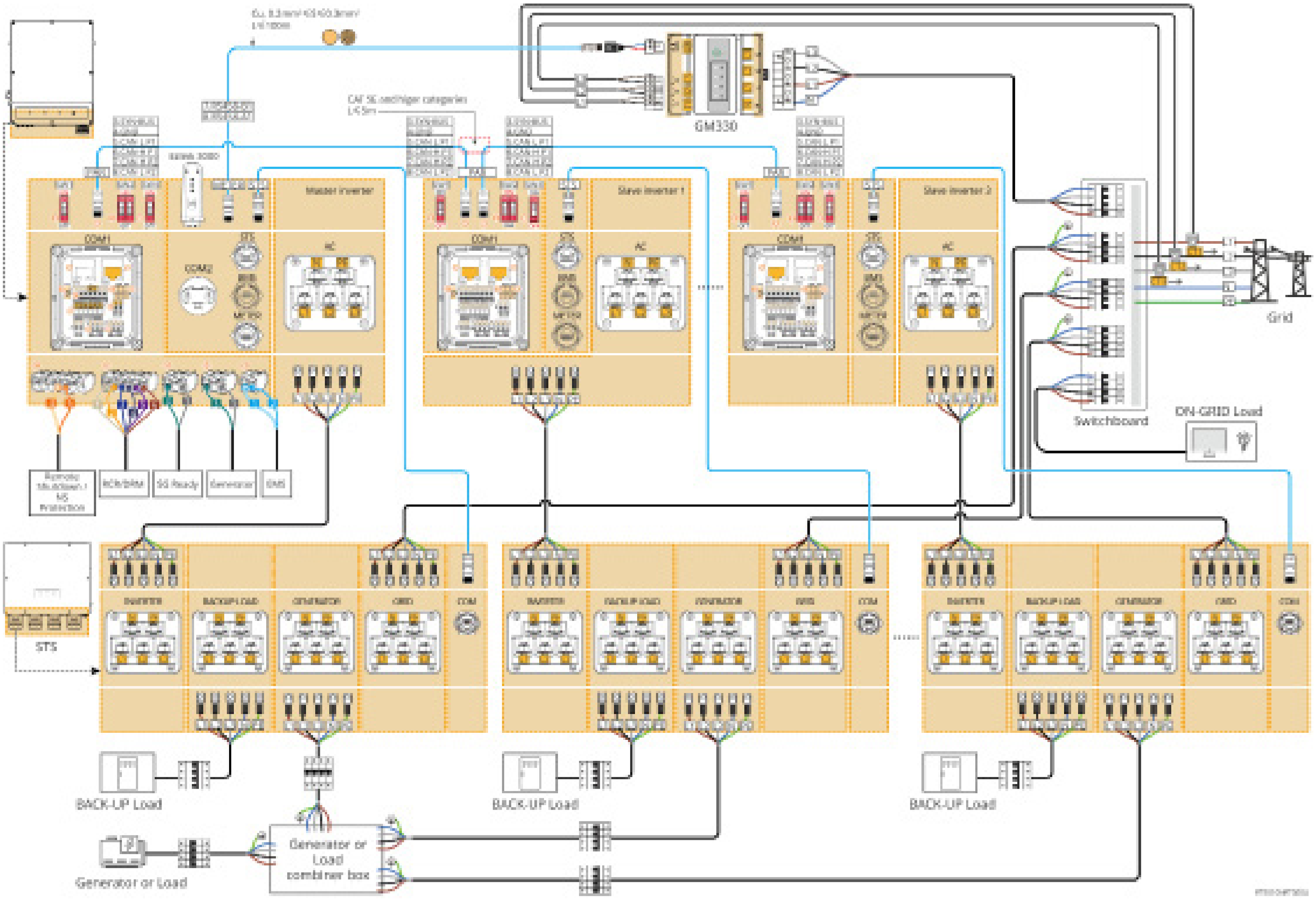

Multiple inverter in parallel, without BACK-UP paralleling: Inverters + STS + Battery + SEC3000C + WiFi/LAN Kit-20 (number of inverters ≤ 10)

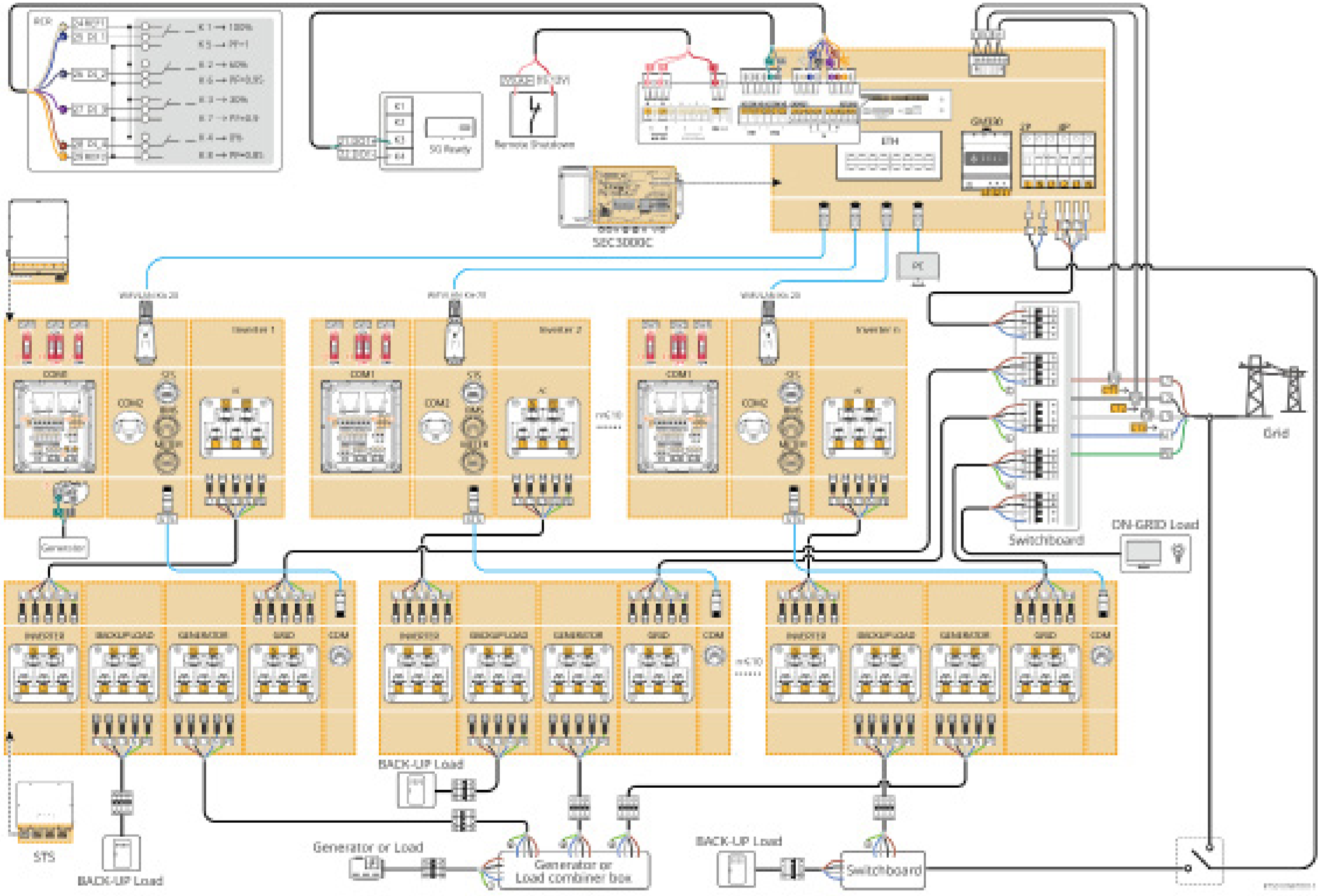

Multiple inverter in parallel, with BACK-UP paralleling: Inverters + STS + Battery + GM330 + Ezlink3000 (number of inverters ≤ 4)

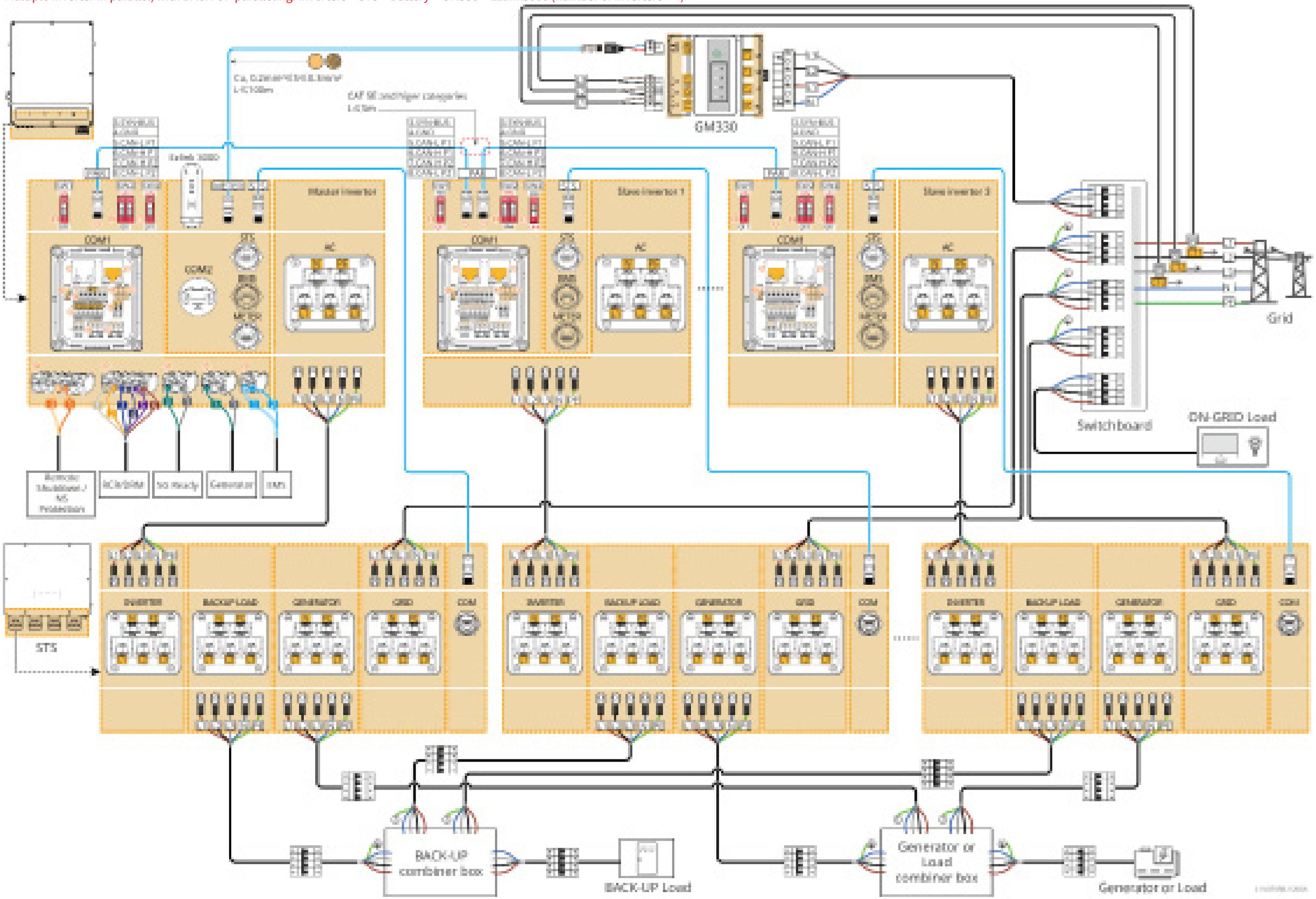

Multiple inverter in parallel, with BACK-UP paralleling: Inverters + STS + Battery + GM330 + Ezlink3000 (number of inverters ≤ 10)

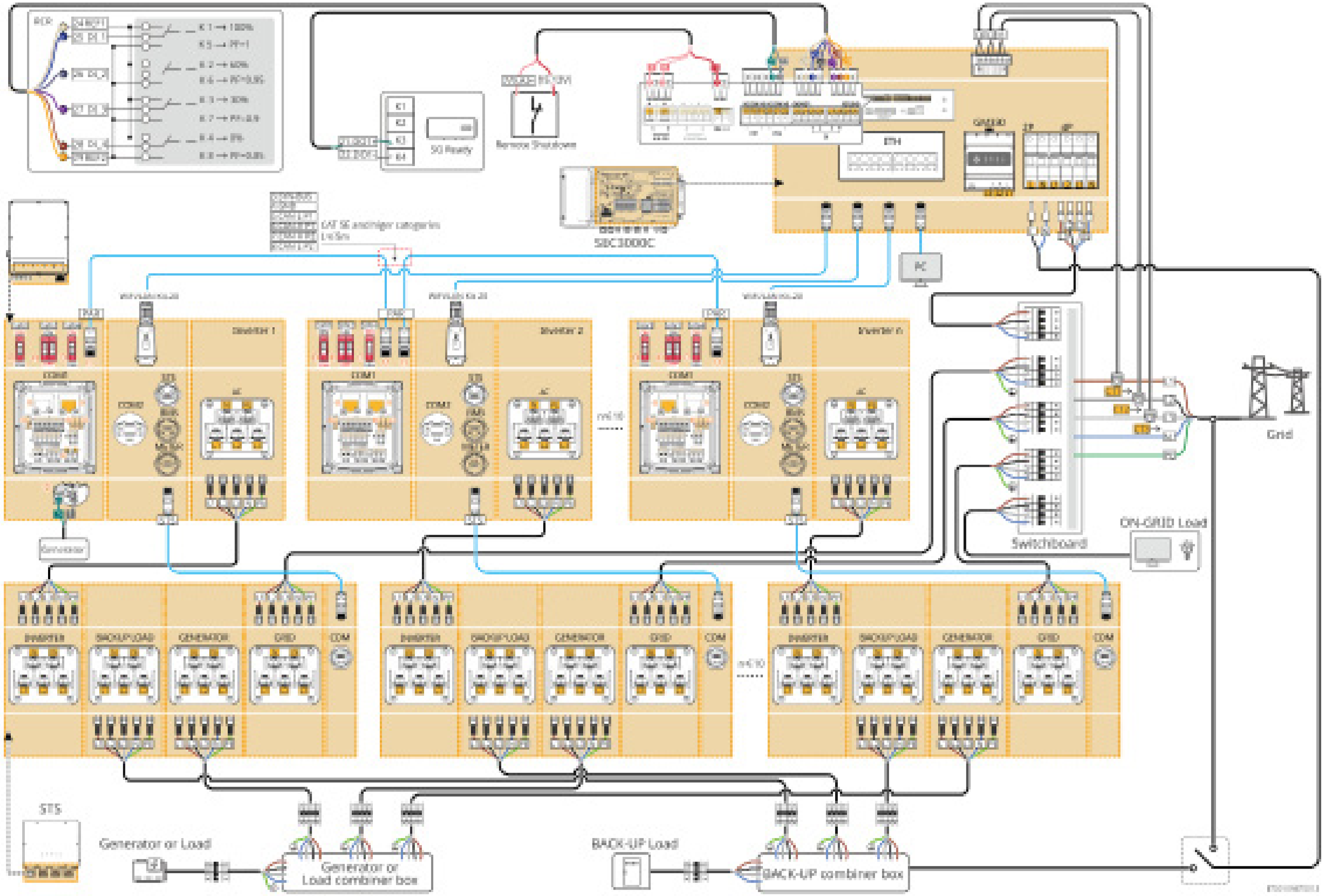

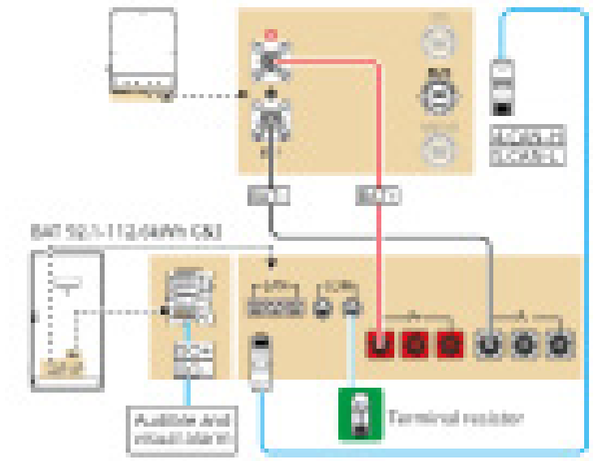
Audible And Visual Alarm
Terminal resistor

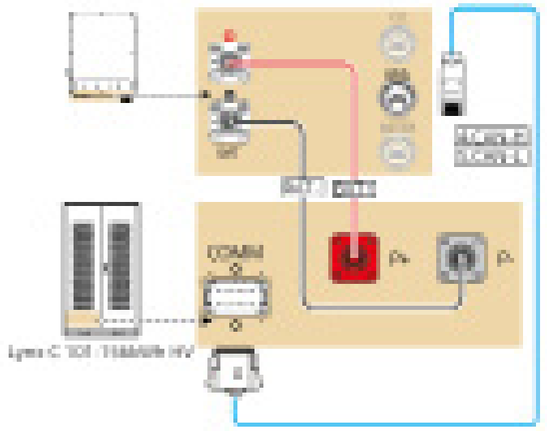
COMM

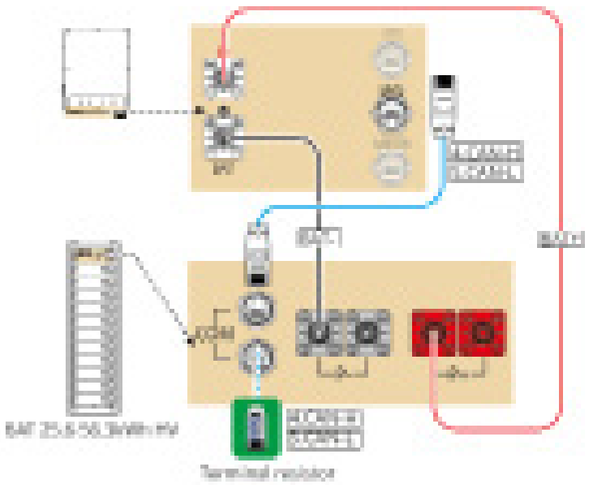
COM
Terminal resistor

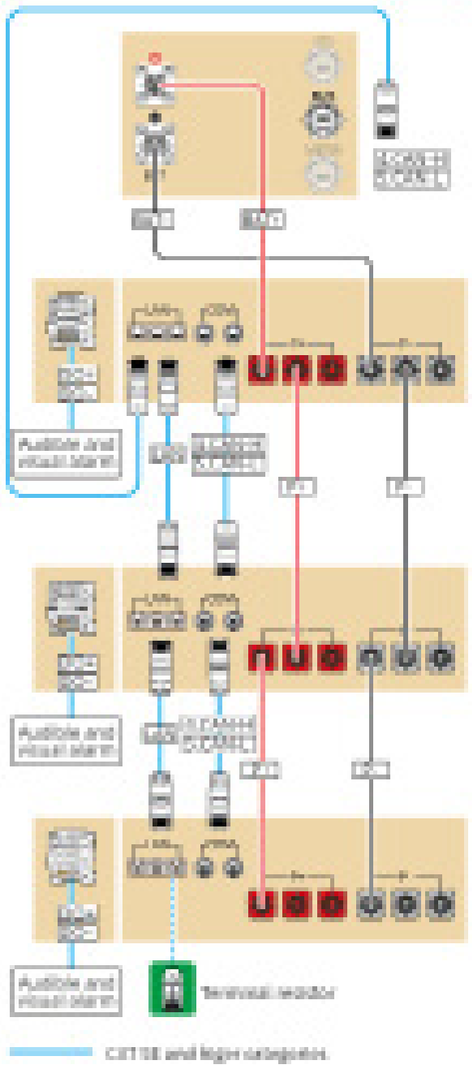
Audible And Visual Alarm
Terminal resistor

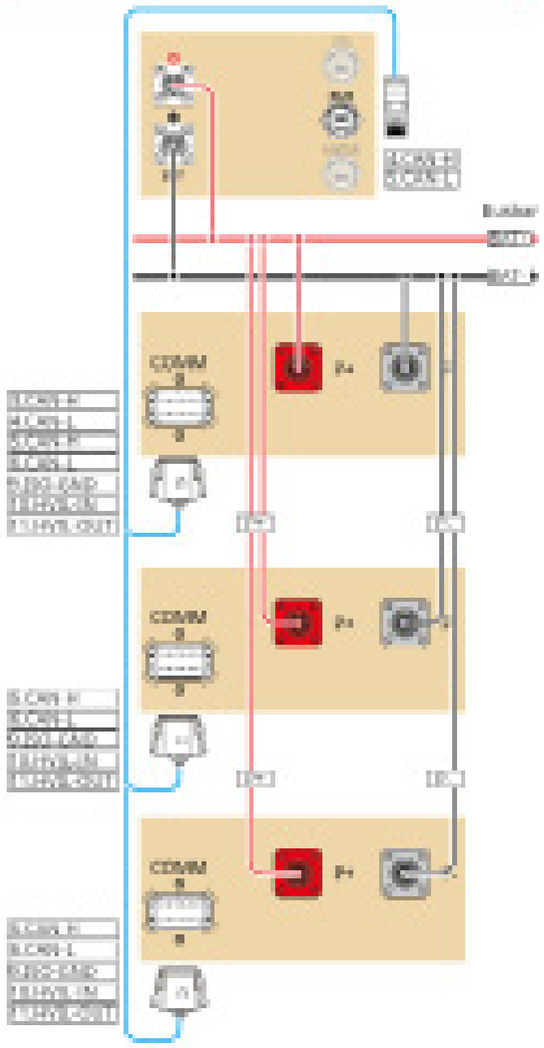
COMM

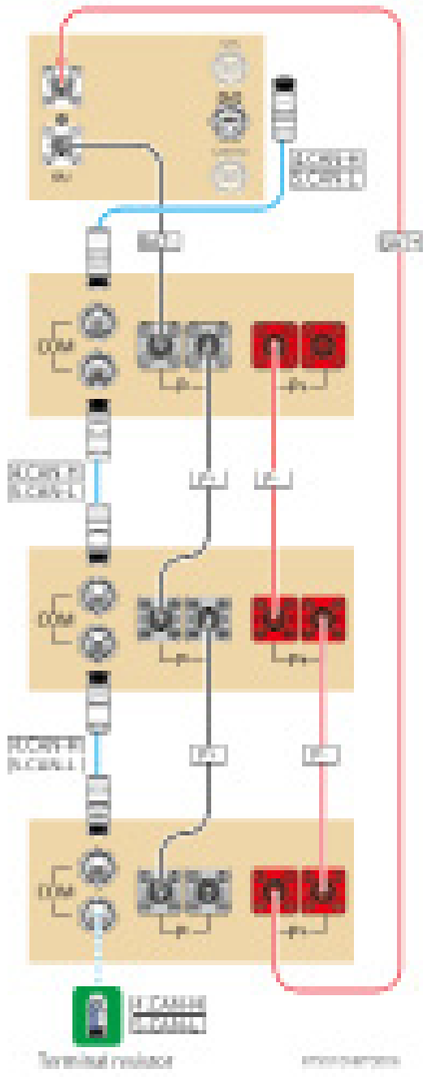
COM
Terminal resistor

## 05 Commissioning

If the energy storage system has been operated independently, it is necessary to ensure that all energy storage system parameters are set the same before forming a parallel system; Otherwise, it may result in the failure of parallel system parameter settings.

SolarGo App

SEMS Portal App

- In parallel scenarios, the software version of SolarGo App should be 5.7.1 or above.
- Follow the prompts to connect the device.

### Quick Settings

Tap **Home > Settings > Quick Settings** to complete quick settings step by step.
Installer password: **goodwe2010**

#### Setting the Safety Code

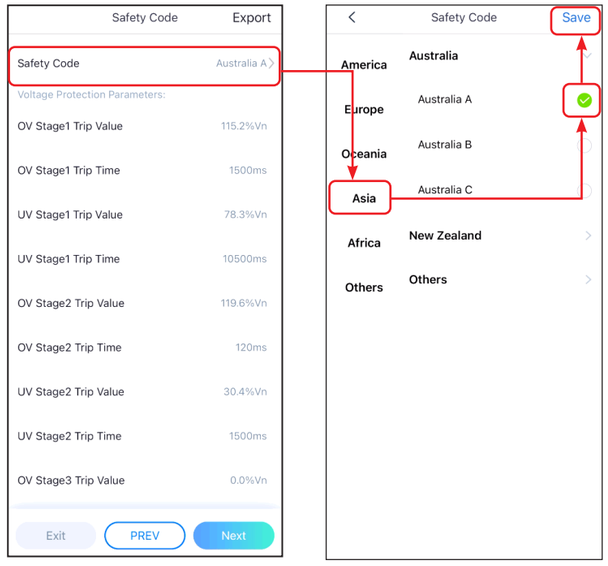


#### Setting Inverter Quantity (Only For Parallel Connections)

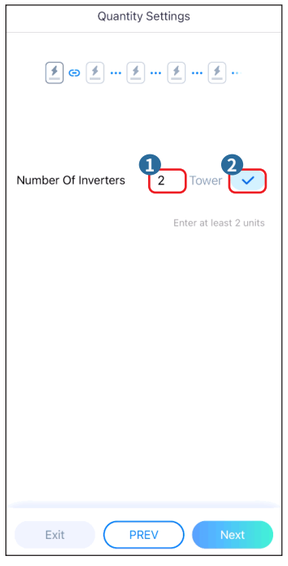


#### Setting the BAT Connect Mode

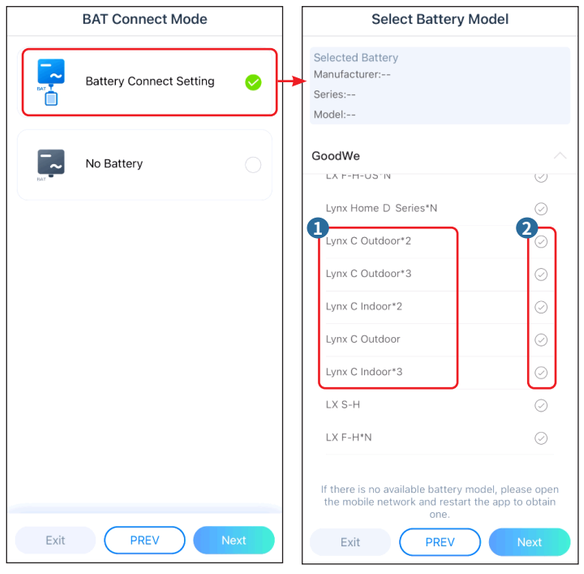


### Setting the Working Mode

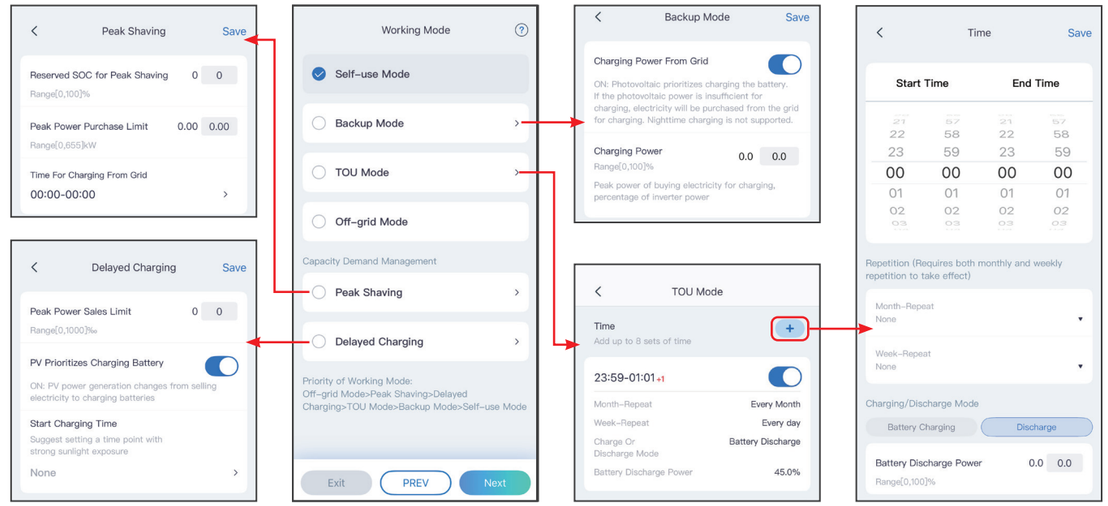


### Setting Wiring Method

Do not set the Wiring Method if the inverter is installed for the first time and only one inverter is applied.
Log in SolarGo app and tap **Home > Settings > Wiring Method** to set the wiring method.

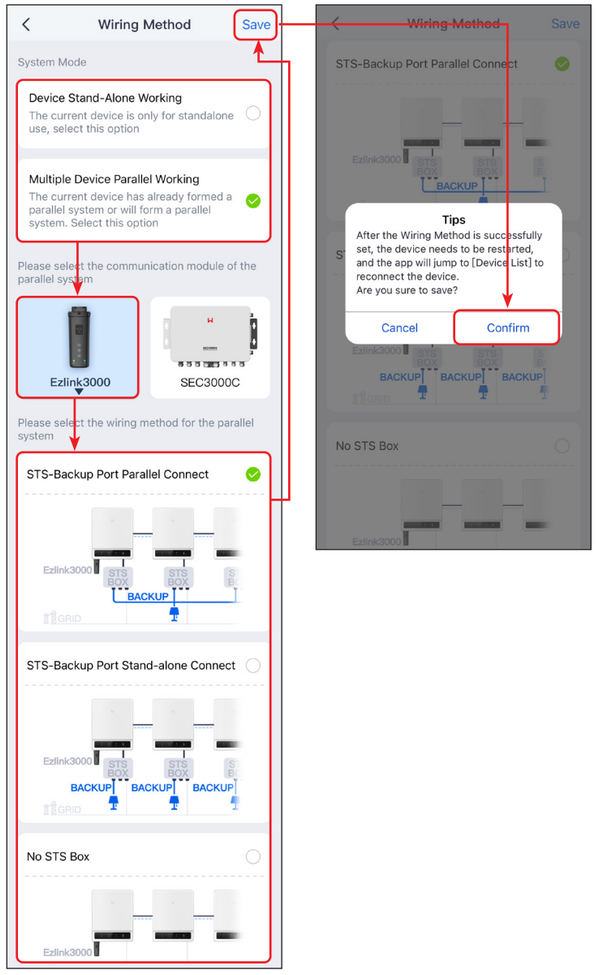

## Setting Batteries Of Each Inverters (Only For Parallel Connections)

Open SolarGo App. Follow the prompts to set the battery model and connection mode of each inverter.

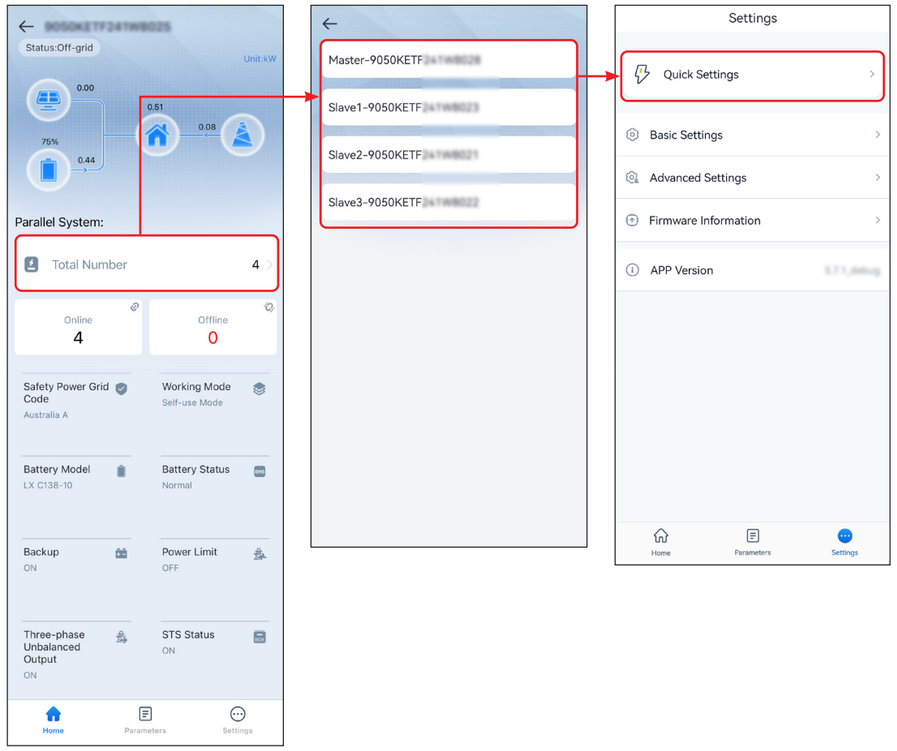


## Setting Advanced Parameters

Tap **Home > Settings > Advanced** Settings to set the following functions.

### Setting DRED/Remote Shutdown/RCR or Three-phase Unbalanced Output Function (Optional)

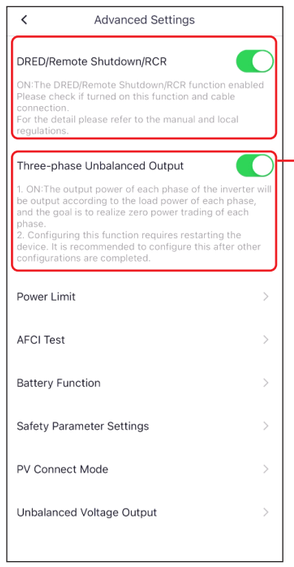


Enable Three-phase Unbalanced Output when the utility grid company adopts phase separate billing.

### Setting the Power Limit Function

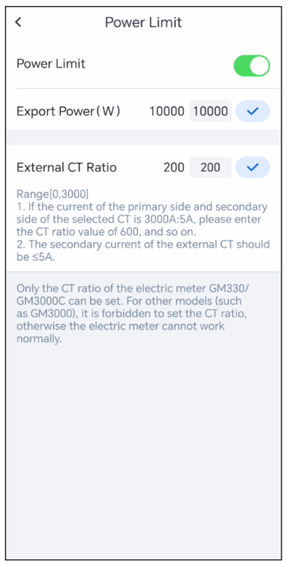


## Configuring the Network

Tap **Home > Settings > Communication Setting** to set network parameters.

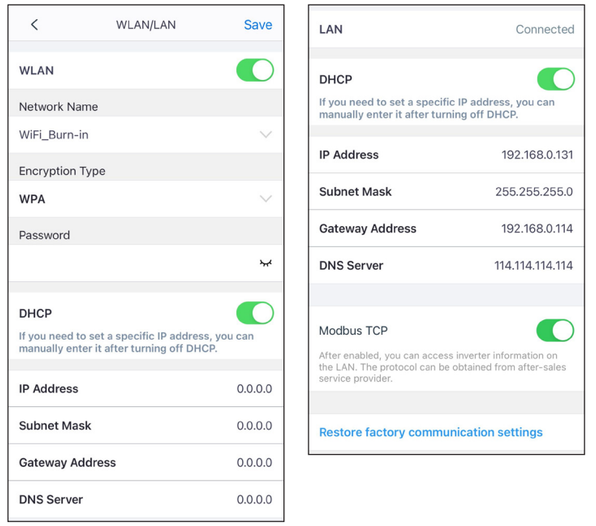


## Creating a Power Plant

Create power plants and add equipments via SEMS Portal app.

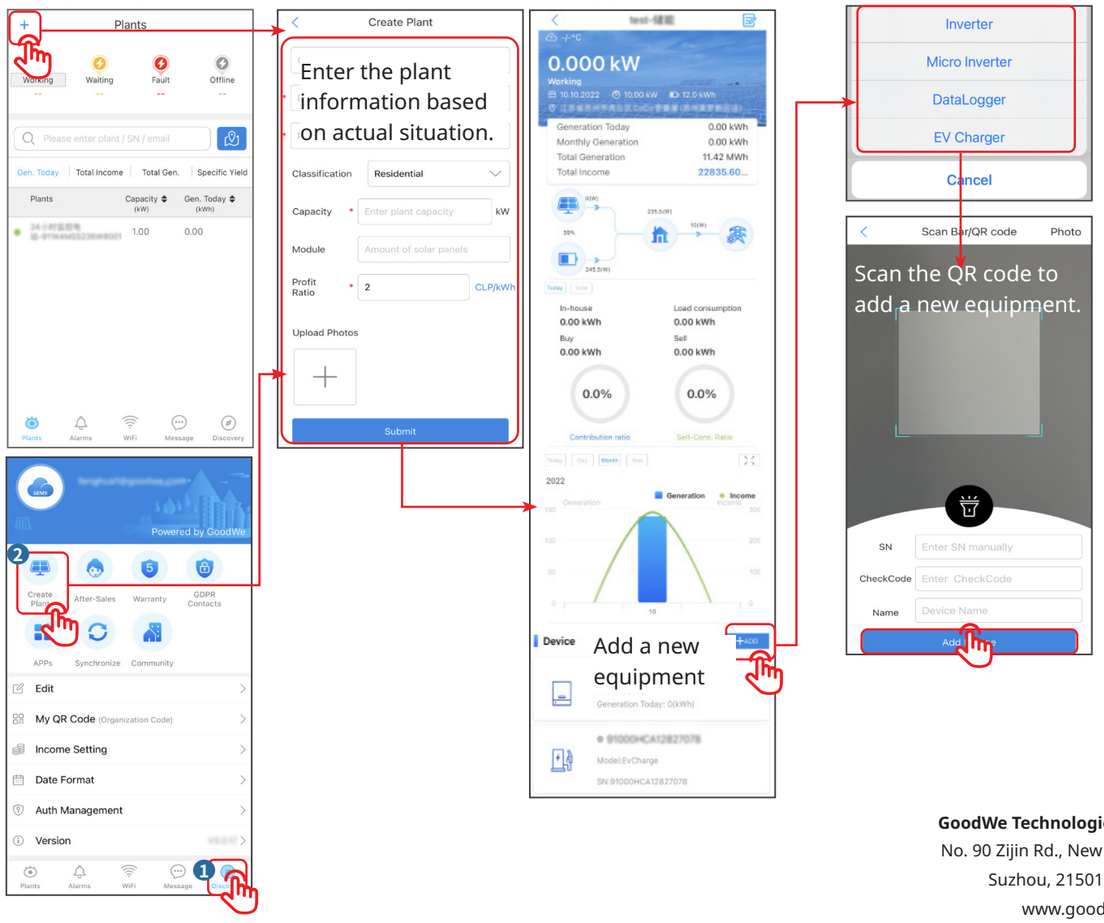


**GoodWe Technologies Co., Ltd.**
No. 90 Zijin Rd., New District,
Suzhou, 215011, China
www.goodwe.com
service@goodwe.com